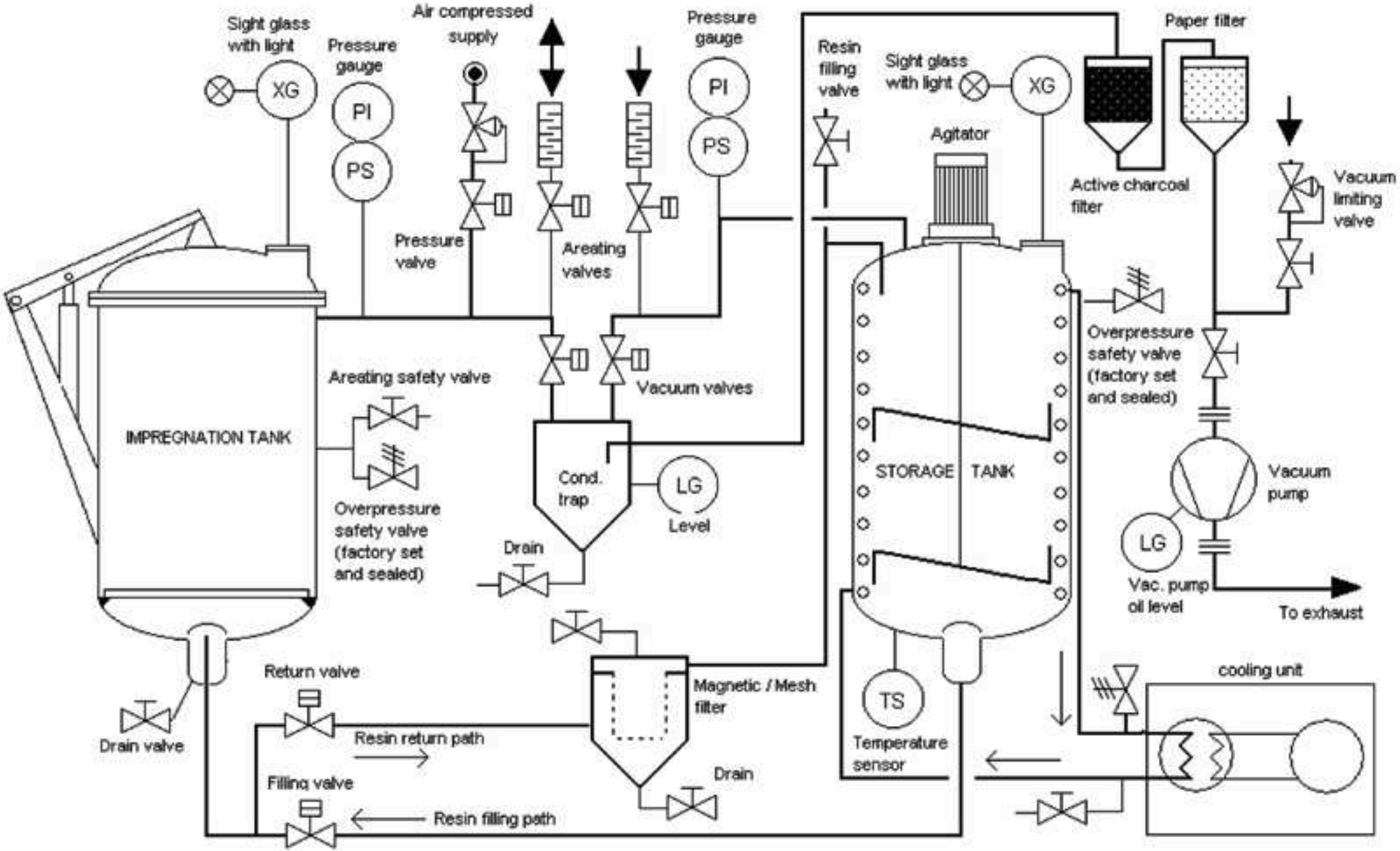
Sight glass with light
XG
Pressure gauge
PI
PS
Air compressed supply
Pressure valve
Areating valves
Pressure gauge
PI
PS
Resin filling valve
Sight glass with light
XG
Agitator
Paper filter
Active charcoal filter
Vacuum limiting valve
IMPREGNATION TANK
Areating safety valve
Overpressure safety valve (factory set and sealed)
Vacuum valves
Cond. trap
LG
Level
Drain
STORAGE TANK
Overpressure safety valve (factory set and sealed)
Vacuum pump
LG
Vac. pump oil level
To exhaust
Return valve
Magnetic / Mesh filter
Drain valve
Resin return path
Filling valve
Resin filling path
Drain
TS
Temperature sensor
cooling unit